Since 1949
Acme Sanitary Ware Co. Ltd.
1/F, Acme Building, 22-28 Nanking Street, Kowloon, Hong Kong
Tel: 2388 7171 Fax: 2710 8012
Email: acme@acmesanitary.com.hk
Website: www.acmesanitary.com.hk

American Standard

PROJECT		REF		REV	ITEM CODE	
LOCATION		DATE			PAGE	

SANITARY WARE SPECIFICATION SHEET

Item Descriptions	American Standard (Vietnam) "Harmony" Close coupled dual flush high P-trapway washdown watercloset with Horizontal outlet; nominated flow rate **2.6/3.9 LPF** in WELS **Grade 1**; Registration No. WC 25-0084
Outlet	H.O. trapway 190 mm S-trap, RI 140-160 mm
Dimensions	L660 x W388 x H790 mm
Model	CL3253B-6DAWDST CL43134-6DAWDBL
Colour	White
Material	Vitreous China
Manufacturer	American Standard (Vietnam)
Source	Acme Sanitary Ware Co. Ltd Mr. Eric Wong / Mr. Wilson Hung
Contact Tel/Fax	(852) 2388-7171 / (852) 2710-8012
E-mail	acme@acmesanitary.com.hk
Website	www.acmesanitary.com.hk

Illustration/ Drawing



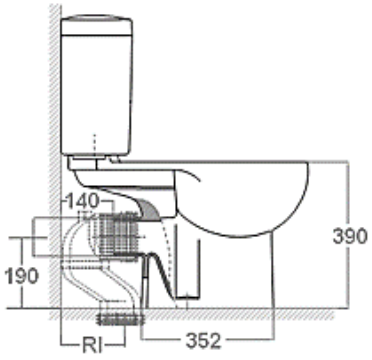

RI: 140-160 mm

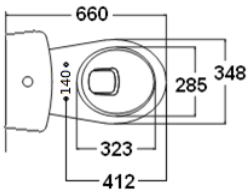

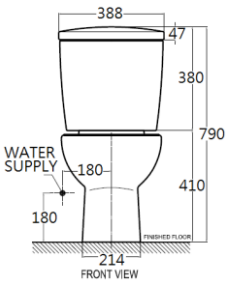

Note: Equivalent to TF3253PJ/4313PJ + B4900H

** All information of the above is for the reference only. No prior notice is made if any changes.*

註冊號碼 (Registration No.)： WC 25-0084

自願參與用水效益標籤計劃 - 水廁
Voluntary Water Efficiency Labelling Scheme - Water Closets

Certificate of Registration 註冊證書



ACME SANITARY WARE CO., LTD. 2388 1171

茲證明
This is to certify that

將下列水廁在本計劃內註冊：
has registered the following water closet under this scheme :

牌　子 / Brand	:	American Standard + WDI
型　號 / Model	:	CL3253B-6DAWDST + CL43134-6DAWDBL + B4900H
種　類 / Category	:	Close-coupled Suite
原產地 / Country or Region Origin	:	Vietnam (WC Pan & Cistern) China (Flushing Valve)
在用水效益標籤上展示的標誌 *Symbolic Presentation on the Water Efficiency Label*	:	滴水點 *Water droplet(s)*
用水效益級別 *Water Efficiency Grade*	:	1
全沖水量 *Water Flush Volumn (Full)*	:	3.9 公升/沖廁 *litres/flush*
低沖水量 *Water Flush Volumn (Reduced)*	:	2.6 公升/沖廁 *litres/flush*

簽發日期：
Date of Issue: 19 December 2025

水務署
Water Supplies Department

龍庭瑋共

水務署署長(龔庭瑋代行)
for Director of Water Supplies

+ 上述水廁具額外節水功能，即：重用洗盥水作沖廁用途。
The above water closet is equipped with additional water saving feature, that is: re-use the water collected from wash basin for flushing purpose.

Since 1949
Acme Sanitary Ware Co. Ltd.
1/F, Acme Building, 22-28 Nanking Street, Kowloon, Hong Kong
Tel: 2388 7171 Fax: 2710 8012
Email: acme@acmesanitary.com.hk
Website: www.acmesanitary.com.hk

PROJECT		REF		REV	ITEM CODE	
LOCATION		DATE			PAGE	

SANITARY WARE SPECIFICATION SHEET

Item Descriptions	WDI (PRC) Adjustable plastic inlet valve
Dimensions	Refer to drawing
Model	B3800E
Material	Plastic
Manufacturer	WDI (PRC)
Supplier	Acme Sanitary Ware Co. Ltd Mr. Eric Wong / Mr. Wilson Hung
Contact Tel/Fax	(852) 2388-7171 / (852) 2710-8012
E-mail	acme@acmesanitary.com.hk
Website	www.acmesanitary.com.hk

Illustration/ Drawing



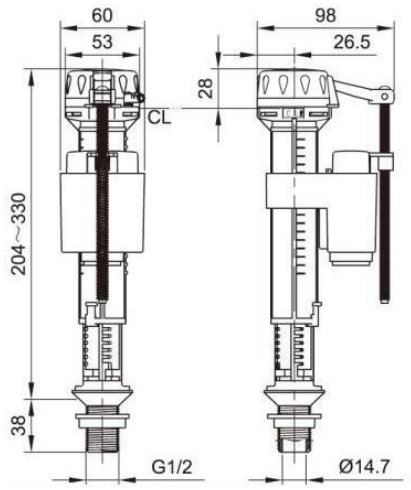

Note: The color of the above fittings may be varied without further notice.

** All information of the above is for the reference only. No prior notice is made if any changes.*

水務署
Water Supplies Department

香港灣仔告士打道七號入境事務大樓
Immigration Tower, 7 Gloucester Road, Hong Kong.

電子郵遞 wsdinfo@wsd.gov.hk
e-mail

電 圖文傳真 2824 0578
Te Facsimile

ACME SANITARY WARE CO., LTD. 2388 7171

(in 3321/2025 T/J(85/2025)

17 March 2025



Approval of "WDI" Float Operated Valve
(General Acceptance No. ZC20250174F)

Your letters dated 27 January 2025 and 21 February 2025 refer.

Having considered the test report ref. J29969 issued on 2 August 2024 by Nutek Systems (HK) Limited, this Authority accepts that the fitting described below complies with, and its use when correctly installed does not contravene, the Waterworks Ordinance and Regulations.

Name of Manufacturer:	ECO (Xiamen) Technology Inc
Country of Origin:	the Mainland of China
Brand:	WDI
Details of Fitting:	1/2" Plastic float operated valve
Model:	B3800E
Body Markings:	**WDI**
Expiry Date:	3 March 2030

東江水供港
香港環境卓越大獎
15 years+ 同心益賢達 caringorganisation

Proviso: As the fitting has not been tested for use in contact with water intended for human consumption, the fitting can only be used in flushing water plumbing systems.

This Authority hereby permits the use of the above fitting in flushing water plumbing systems subject to full adherence to Waterworks installation requirements. In particular, you are required to draw your customers' attention to the following requirement-

> "The flushing volume of the flushing valve should be adjusted to suit the design of the toilet bowl so that wastes can be cleared effectively by a single flush."
>
> "The fitting should be used within the range of working pressures specified by the manufacturer." AND
>
> "The installed fitting should not result in backflow of water that will contaminate the flushing water supply."

A condition of this acceptance is that the fitting to be installed shall be replicas of the sample as certified by the testing agent mentioned above and without modifications. This acceptance may be withdrawn at any time if the standard of the fitting installed fails to meet that of the approved sample or if the fitting is found to be unsuitable for use in flushing water plumbing systems.

For the use of the fitting in any project, the General Acceptance Number of this letter must be quoted as a means of identification of acceptance of the fitting by this Authority.

Should you have any enquiries, please contact our Engineer Mr Albert CHOW at tel. no. 3583 4086.

Yours faithfully,

(Terry KUNG)
for Director of Water Supplies

Encl.

c.c. WSD 3321/1/82] - without catalogue
ME/MC] - with soft copy only

Since 1949
Acme Sanitary Ware Co. Ltd.
1/F, Acme Building, 22-28 Nanking Street, Kowloon, Hong Kong
Tel: 2388 7171 Fax: 2710 8012
Email: acme@acmesanitary.com.hk
Website: www.acmesanitary.com.hk

PROJECT		REF		REV	ITEM CODE	
LOCATION		DATE			PAGE	

SANITARY WARE SPECIFICATION SHEET

Item Descriptions	WDI (PRC) Adjustable 3/6L dual flush valve with lockable design for cistern lid
Dimensions	Refer to drawing
Model	B4900H
Material	Plastic
Manufacturer	WDI (PRC)
Supplier	Acme Sanitary Ware Co. Ltd Mr. Eric Wong / Mr. Wilson Hung
Contact Tel/Fax	(852) 2388-7171 / (852) 2710-8012
E-mail	acme@acmesanitary.com.hk
Website	www.acmesanitary.com.hk

Illustration/ Drawing





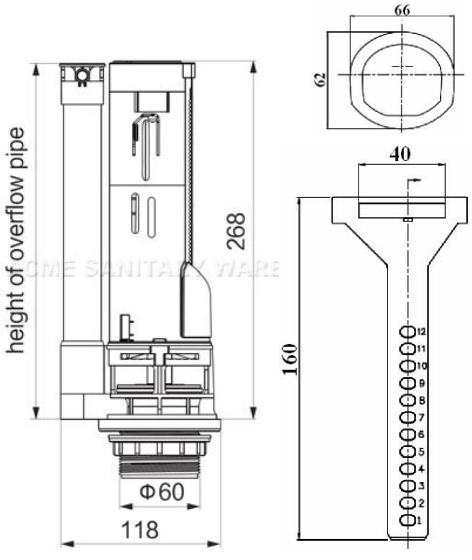

Note: The color of the above fittings may be varied without further notice.

** All information of the above is for the reference only. No prior notice is made if any changes.*

水 務 署
Water Supplies Department

香港灣仔告士打道七號入境事務大樓
Immigration Tower, 7 Gloucester Road, Hong Kong.

wsd.gov.hk

圖文傳真
Facsimile 2824 0578

ACME SANITARY WARE CO., LTD. 2388 1171

WSD 3321/2024 T/J(1335/2024)

4 February 2025



Approval of "WDI" Flush Valve
(General Acceptance No. ZC20250082F)

Your letters ref. L-TT-9206, L-TT-9208 and L-TT-9211 dated 13 November 2024, 13 December 2024 and 8 January 2025 respectively refer.

Having considered the test report ref. J30123r1 issued on 12 December 2024 by Nutek Systems (HK) Limited, this Authority accepts that the fitting described below complies with, and its use when correctly installed does not contravene, the Waterworks Ordinance and Regulations.

Name of Manufacturer:	ECO (Xiamen) Technology Inc
Country of Origin:	the Mainland of China
Brand:	WDI
Details of Fitting:	2" Plastic dual flush valve
Model:	B4900H
Body Markings:	**WDI ® B4900**
Expiry Date:	2 April 2030

Proviso: As the fitting has not been tested for use in contact with water intended for human consumption, the fitting can only be used in flushing water plumbing systems.

This Authority hereby permits the use of the above fitting in flushing water plumbing systems subject to full adherence to Waterworks installation requirements. In particular, you are required to draw your customers' attention to the following requirement-

"The flushing volume of the flushing valve should be adjusted to suit the design of the toilet bowl so that wastes can be cleared effectively by a single flush."

"The fitting should be used within the range of working pressures specified by the manufacturer." AND

"The installed fitting should not result in backflow of water that will contaminate the flushing water supply."

A condition of this acceptance is that the fitting to be installed shall be replicas of the sample as certified by the testing agent mentioned above and without modifications. This acceptance may be withdrawn at any time if the standard of the fitting installed fails to meet that of the approved sample or if the fitting is found to be unsuitable for use in flushing water plumbing systems.

For the use of the fitting in any project, the General Acceptance Number of this letter must be quoted as a means of identification of acceptance of the fitting by this Authority.

Should you have any enquiries, please contact our Engineer Mr Albert CHOW at tel. no. 3583 4086.

Yours faithfully,

(Terry KUNG)
for Director of Water Supplies

Encl.

c.c. WSD 3321/1/82] - without catalogue
ME/MC] - with soft copy only